Voyager® *Pro*
Instruction Manual

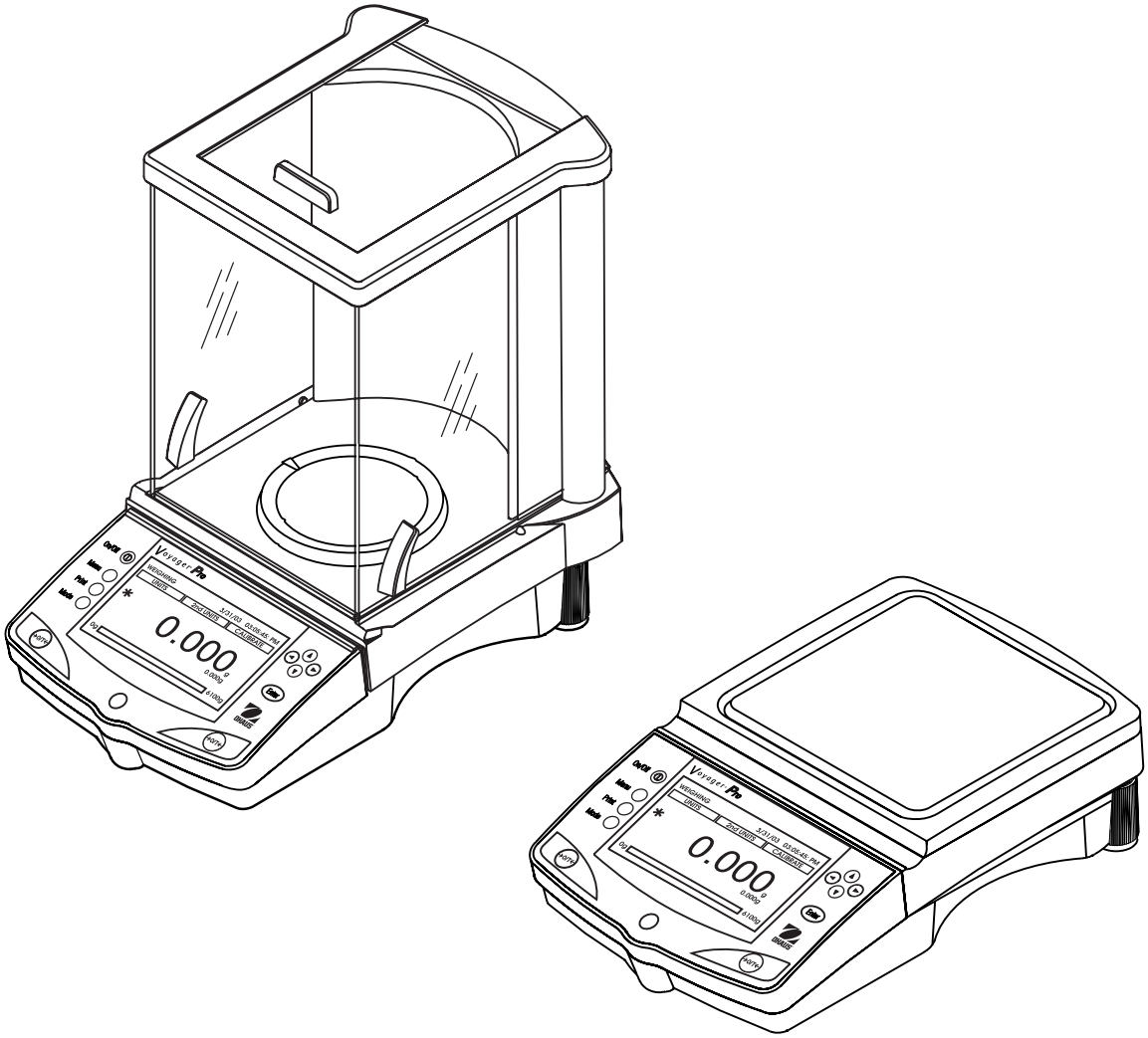

TABLE OF CONTENTS

1. INTRODUCTION EN-3
1.1 Description EN-3
1.2 Features EN-3
1.3 Safety Precautions EN-3

2. INSTALLATION EN-3
2.1 Unpacking EN-3
2.2 Installing Components EN-4
2.2.1 Platform Installation EN-4
2.2.2 Windshield Installation EN-4
2.2.3 Weigh Below Preparation EN-4
2.3. Selecting the Location EN-5
2.3.1 Balance Location EN-5
2.3.2 Leveling the Balance EN-5
2.4 Connecting Power and Communications EN-6
2.4.1 AC Adapter Installation EN-6
2.4.2 RS232 Interface EN-6
2.4.3 Initial Calibration EN-7

3. OPERATION EN-8
3.1 Overview of Controls EN-8
3.2 Overview of Display Indicator EN-10
3.3 Menu EN-11
3.3.1 Menu Structure EN-11
3.3.2 Navigation EN-11
3.3.3 Turning On the Balance EN-11
3.4 Applications EN-12
3.4.1 Weighing EN-12
3.4.2 Parts Counting EN-13
3.4.3 Animal Weighing EN-17
3.4.4 Percent Weighing EN-19
3.4.5 Check Weighing EN-20
3.4.6 Filling EN-21
3.4.7 Gross/Net/Tare Weighing EN-22
3.4.8 Differential Weighing EN-23
3.4.9 Formulation EN-25
3.4.10 Statistics EN-26
3.4.11 Statistical Quality Control (SQC) EN-29
3.4.12 Density EN-31
3.4.13 Pipette EN-37

TABLE OF CONTENTS (Cont.)

3.5 Balance Settings EN-40
3.5.1 Calibration EN-40
3.5.2 Balance Options EN-41
3.5.3 Readout EN-42
3.5.4 Application Modes EN-42
3.5.5 Units EN-42
3.5.6 Interface EN-44
3.5.7 Print Options EN-44
3.5.8 GLP Print Options EN-44
3.5.9 Library EN-45
3.5.10 Lockout EN-46
3.5.11 Factory reset EN-46
3.9.12 LFT Legal for Trade EN-47
3.5.13 Hardware Lock Switch EN-47
3.5.14 Sealing the Balance EN-47
3.6 Printing Data EN-47

4. CARE AND MAINTENANCE EN-48
4.1 Cleaning EN-48
4.2 Troubleshooting EN-48
4.3 Error Codes List EN-49
4.4 Service Information EN-50
4.5 Replacement Parts EN-50
4.6 Accessories EN-50

5. TECHNICAL DATA EN-51
5.1 RS232 Commands EN-51
5.2 Specifications EN-52

INDEX

This is a “Table of Contents preview” for quality assurance

The full manual can be purchased from our store:
https://the-checkout-tech.com/manuals/ohaus/Voyager Pro instruction manual.html

And our free Online Keysheet maker:
https://the-checkout-tech.com/Cash-Register-Keysheet-Creator/

HTTPS://THE-CHECKOUT-TECH.COM